BÖHMER

OUR EXPERIENCE – YOUR SAFETY

High pressure four-way ball valve with threaded ports

Construction with zero position

DN 3-40 | PN 63-400

VHG

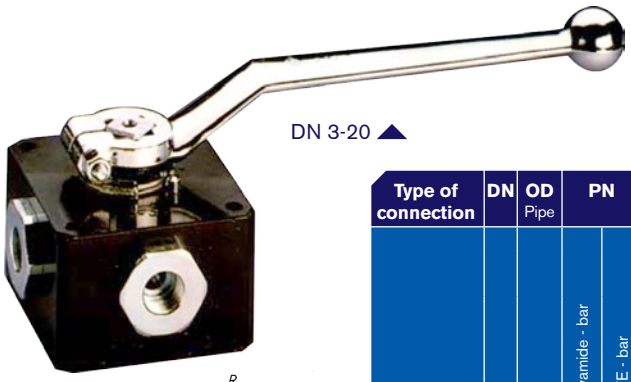

DN 3-20

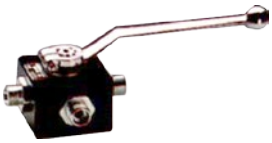

DN 25-40

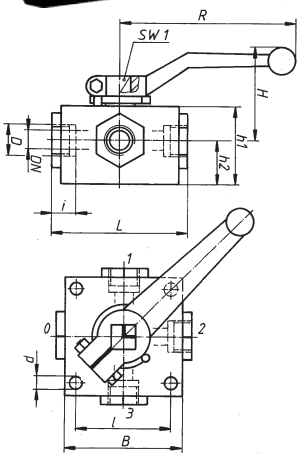

	PN	DN	Type 1
	100-400	3-20	Steel
Body	63-100	25-40	Spheroidal cast iron
	100-400	3	Stainless steel
		4-20	Brass, hard chromed
Ball	63-100	25-40	Spheroidal cast iron, hard chromed
Seals	63-400	3-40	Polyamide

	PN	DN	Type 2
	100-400	3-20	Steel
Body	63-100	25-40	Spheroidal cast iron
	100-400	3	Stainless steel
		4-20	Brass, hard chromed
Ball	63-100	25-40	Spheroidal cast iron, hard chromed
Seals	63-400	3-40	PTFE

Pleas quote order-no. and type:
VHG (T/L/X) XXX.XXX / Type (1 o. 2)

- The handle is included.
- Ball valves with PTFE seals are normally delivered with FPM O-rings.
- Special designs upon requests.

Type of connection	DN	OD Pipe	PN Polyamide	PN PTFE	D	i	L	B	l	h_1	h_2	d	H	R	SW 1	Mass	Order-No. Scheme T (Pos.I, Pos.II, Pos.III, Pos.IV)	Order-No. Scheme L (Pos.I, Pos.II, Pos.III, Pos.IV)	Order-No. Scheme X (Pos.I, Pos.II)
	mm	mm	bar	bar	mm	mm	mm	mm	mm	mm	mm	mm	mm	mm	mm	kg			
1 For compression fitting with ball-Type nipple, DIN 7601																	VHG	VHG	VHG
	3	-	400	-	M 10 x 1,0	8	71	45	35	32	18	5,5	45	90	8	0,8	T 400.103	L 400.103	X 400.103
	4	-	400	250	M 12 x 1,5	10	102	70	55	47,5	26	6,5	73	205	16	2,0	T 400.104	L 400.104	X 400.104
	6	-	400	250	M 14 x 1,5	10	102	70	55	47,5	26	6,5	73	205	16	2,0	T 400.106	L 400.106	X 400.106
	8	-	315	200	M 16 x 1,5	10	112	80	65	53	30	6,5	75	205	16	3,0	T 315.108	L 315.108	X 315.108
	10	-	315	200	M 18 x 1,5	10	112	80	65	53	30	6,5	75	205	16	3,0	T 315. 110	L 315. 110	X 315. 110
	12	-	250	160	M 22 x 1,5	12	136	100	80	60	35	9	80	205	16	4,5	T 250.112	L 250.112	X 250.112
	16	-	200	160	M 26 x 1,5	12	136	100	80	60	35	9	80	205	16	4,5	T 200.116	L 200.116	X 200.116
	20	-	200	100	M 30 x 1,5	12	145	110	85	72	42,5	9	85	300	16	7,0	T 200.120	L 200.120	X 200.120
	25	-	100	63	M 38 x 1,5	14	170	130	105	85	47,5	11	95	350	22	8,0	T 100.125	L 100.125	X 100.125
	32	-	80	63	M 45 x 1,5	14	194	150	115	95	52,5	11	100	350	22	10,5	T 080.132	L 080.132	X 080.132
	40	-	63	63	M 52 x 1,5	14	234	190	150	110	57,5	14,5	110	350	22	20,0	T 063.140	L 063.140	X 063.140
2 For compression fitting, light series, DIN 2353																	VHG	VHG	VHG
	4	6	250*	250	M 12 x 1,5	10	102	70	55	47,5	26	6,5	73	205	16	2,0	T 250.204	L 250.204	X 250.204
	6	8	250*	250	M 14 x 1,5	10	102	70	55	47,5	26	6,5	73	205	16	2,0	T 250.206	L 250.206	X 250.206
	8	10	250*	200	M 16 x 1,5	11	114	80	65	53	30	6,5	75	205	16	3,0	T 250.208	L 250.208	X 250.208
	10	12	250*	200	M 18 x 1,5	11	114	80	65	53	30	6,5	75	205	16	3,0	T 250.210	L 250.210	X 250.210
	12	15	250	160	M 22 x 1,5	12	136	100	80	60	35	9	80	205	16	4,5	T 250.212	L 250.212	X 250.212
	16	18	160*	160	M 26 x 1,5	12	136	100	80	60	35	9	80	205	16	4,5	T 160.216	L 160.216	X 160.216
	20	22	160*	100	M 30 x 2	14	149	110	85	72	42,5	9	85	300	16	7,0	T 160.220	L 160.220	X 160.220
	25	28	100	63	M 36 x 2	14	170	130	105	85	47,5	11	95	350	22	8,0	T 100.225	L 100.225	X 100.225
	32	35	80	63	M 45 x 2	16	198	150	115	95	52,5	11	100	350	22	10,5	T 080.232	L 080.232	X 080.232
	40	42	63	63	M 52 x 2	16	238	190	150	110	57,5	14,5	110	350	22	20,0	T 063.240	L 063.240	X 063.240
3 For compression fitting, heavy series, DIN 2353																	VHG	VHG	VHG
	4	8	400	250	M 16 x 1,5	12	106	70	55	47,5	26	6,5	73	205	16	2,0	T 400.304	L 400.304	X 400.304
	6	10	400	250	M 18 x 1,5	12	106	70	55	47,5	26	6,5	73	205	16	2,0	T 400.306	L 400.306	X 400.306
	8	12	315	200	M 20 x 1,5	12	116	80	65	53	30	6,5	75	205	16	3,0	T 315.308	L 315.308	X 315.308
	10	14	315	200	M 22 x 1,5	14	120	80	65	53	30	6,5	75	205	16	3,0	T 315.310	L 315.310	X 315.310
	12	16	250	160	M 24 x 1,5	14	140	100	80	60	35	9	80	205	16	4,5	T 250.312	L 250.312	X 250.312
	16	20	200	160	M 30 x 2	16	144	100	80	60	35	9	80	205	16	4,5	T 200.316	L 200.316	X 200.316
	20	25	200	100	M 36 x 2	18	157	110	85	72	42,5	9	85	300	16	7,0	T 200.320	L 200.320	X 200.320
	25	30	100	63	M 42 x 2	20	182	130	105	85	47,5	11	95	350	22	8,0	T 100.325	L 100.325	X 100.325
	32	38	80	63	M 52 x 2	22	210	150	115	95	52,5	11	100	350	22	10,5	T 080.332	L 080.332	X 080.332
7 BSP female thread, DIN ISO 228/1																	VHG	VHG	VHG
	3	-	400	-	G 1/8	11	55	45	35	32	18	5,5	45	90	8	0,8	T 400.703	L 400.703	X 400.703
	4	-	400	250	G 1/8	12,5	82	70	55	47,5	26	6,5	73	205	16	2,0	T 400.704	L 400.704	X 400.704
	6	-	400	250	G 1/4	12,5	82	70	55	47,5	26	6,5	73	205	16	2,0	T 400.706	L 400.706	X 400.706
	8	-	315	200	G 3/8	12,5	92	80	65	53	30	6,5	75	205	16	3,0	T 315.708	L 315.708	X 315.708
	10	-	315	200	G 3/8	12,5	92	80	65	53	30	6,5	75	205	16	3,0	T 315.710	L 315.710	X 315.710
	12	-	250	160	G 1/2	15	113	100	80	60	35	9	80	205	16	4,5	T 250.712	L 250.712	X 250.712
	16	-	200	160	G 1/2	15	113	100	80	60	35	9	80	205	16	4,5	T 200.716	L 200.716	X 200.716
	20	-	200	100	G 3/4	18	129	110	85	72	42,5	9	85	300	16	7,0	T 200.720	L 200.720	X 200.720
	25	-	100	63	G 1	19	151	130	105	85	47,5	11	95	350	22	8,0	T 100.725	L 100.725	X 100.725
	32	-	80	63	G 1 1/4	20	172	150	115	95	52,5	11	100	350	22	10,5	T 080.732	L 080.732	X 080.732
	40	-	63	63	G 1 1/2	23	206	190	150	110	57,5	14,5	110	350	22	20,0	T 063.740	L 063.740	X 063.740

* Do not exeed nominal pipe pressure

All details are subject to technical modifications or typing errors | Published 06.03.15